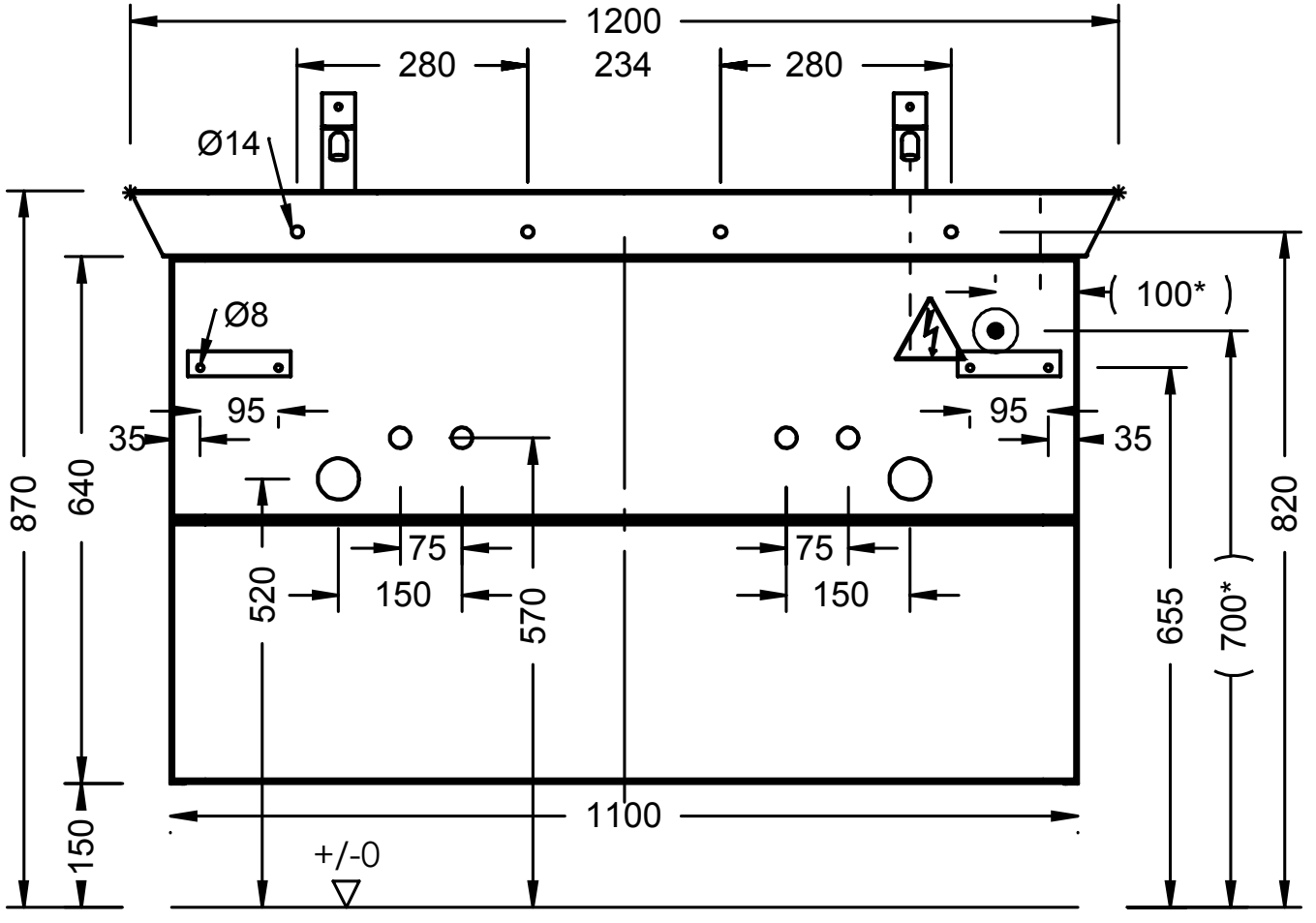

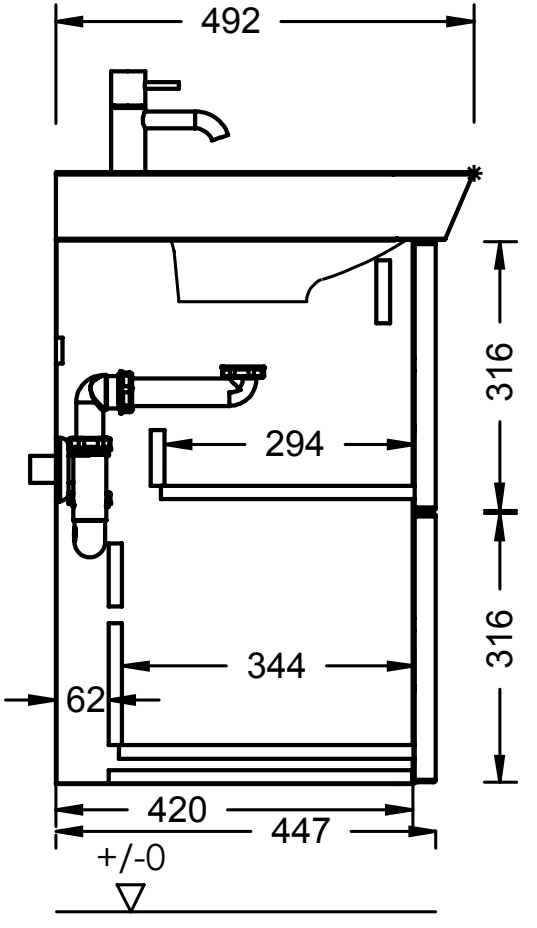

SFEO120
(*) SFFU120