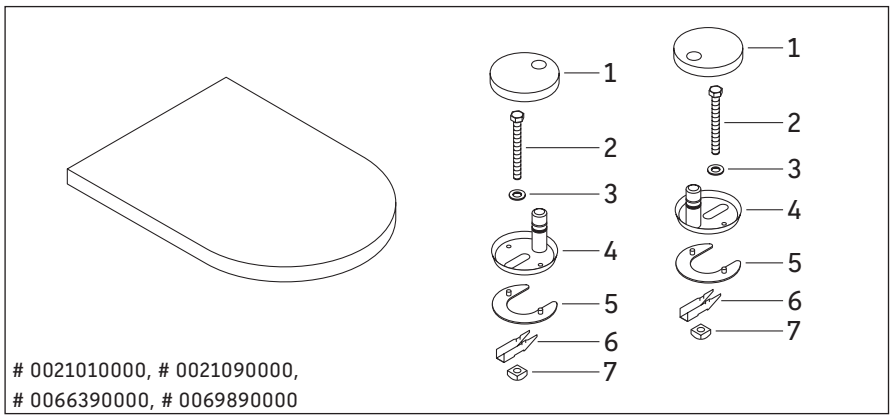

0021010000, # 0021090000,
0066390000, # 0069890000

1

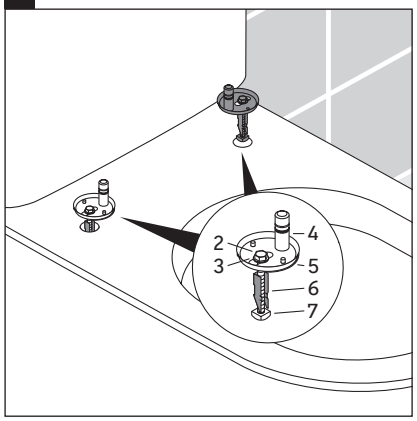

2

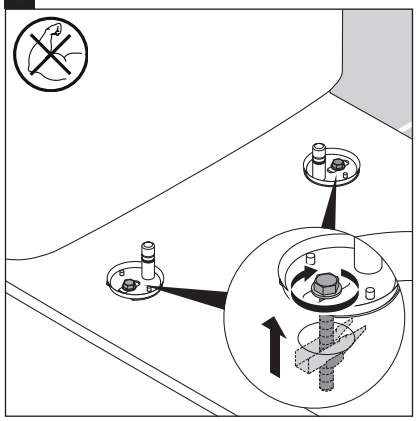

3 # 0066390000

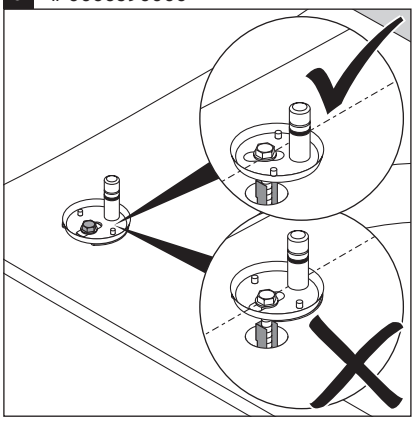

4

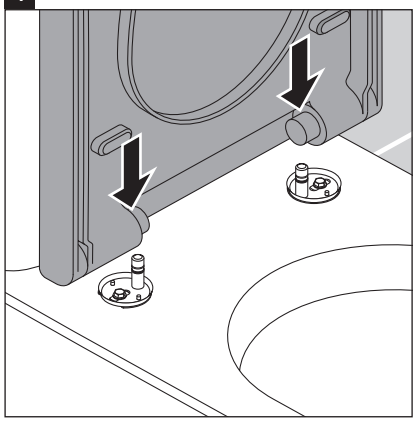

5

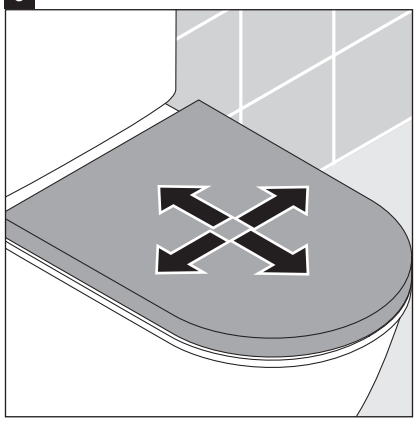

6

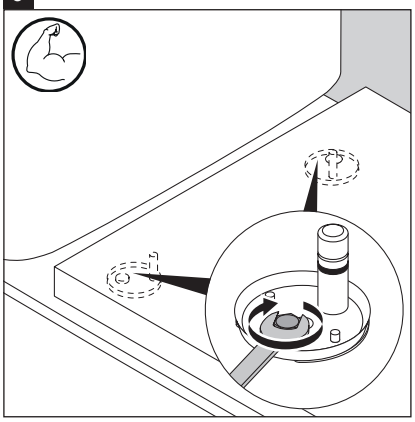

7

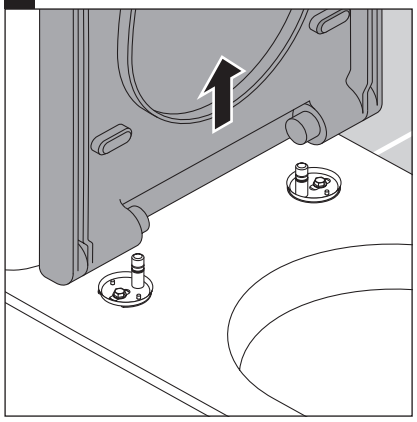

8

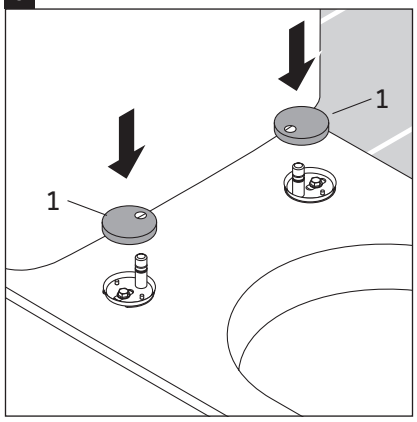

9

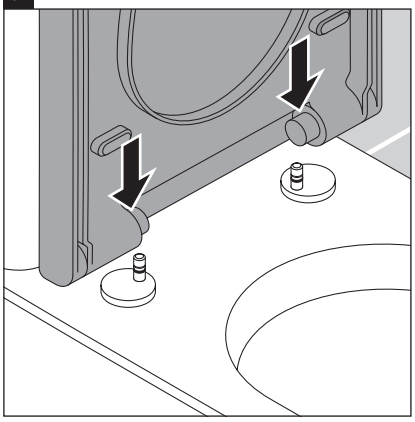

DURAVIT AG, Werderstr. 36, 78132 Hornberg, Germany, Phone +49 78 33 700, Fax +49 78 33 70 289, info@duravit.de, www.duravit.de

57052_110381/MA294
Order no.: 70000560_22.05.2 We reserve the right to make technical improvments and design modifications to the products illustrated.