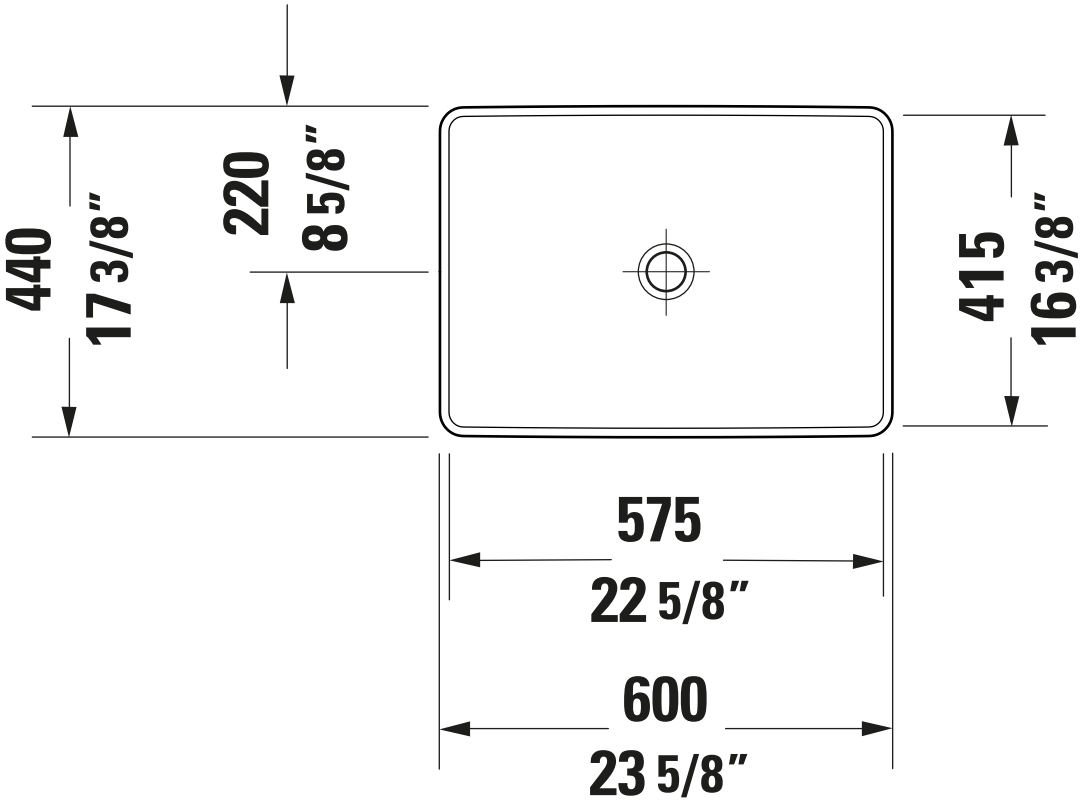
440
17 3/8"
220
8 5/8"
415
16 3/8"
575
22 5/8"
600
23 5/8"

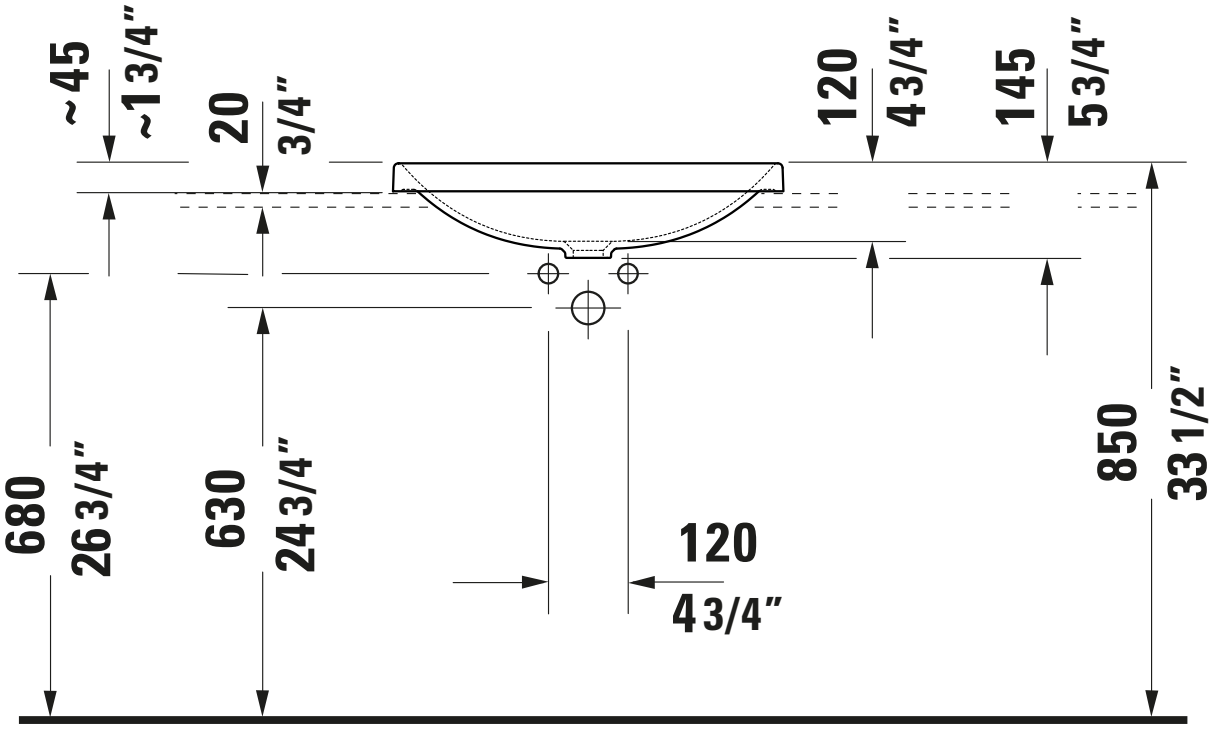
~45
~1 3/4"
20
3/4"
120
4 3/4"
145
5 3/4"
680
26 3/4"
630
24 3/4"
120
4 3/4"
850
33 1/2"