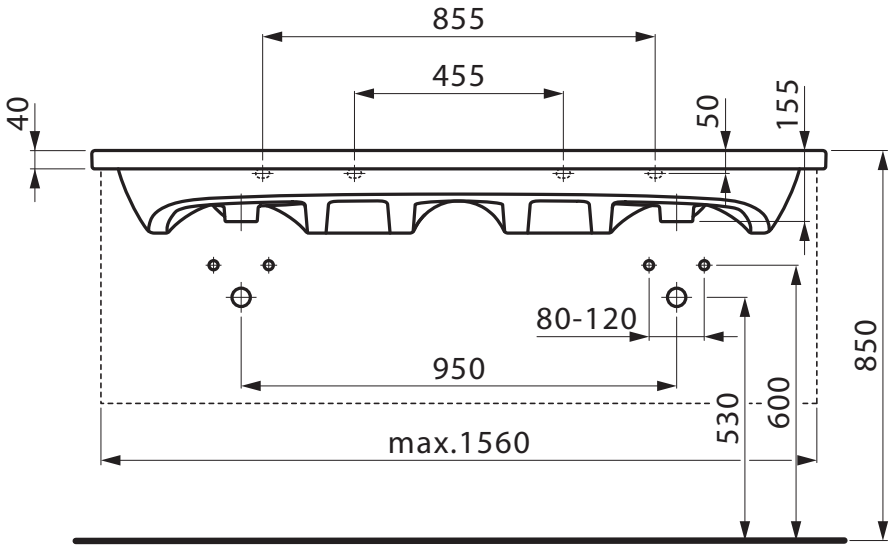
855
455
40
50
155
80-120
950
530
600
850
max.1560

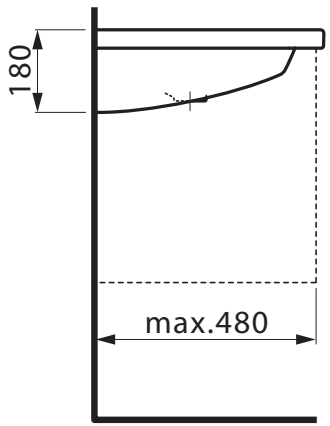
180
max.480

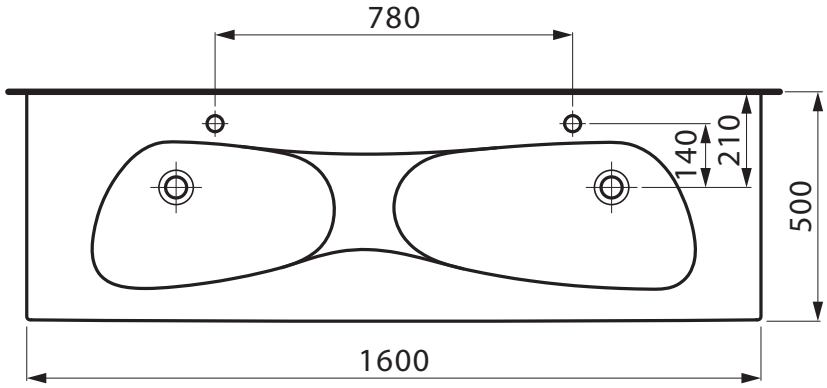
780
140
210
500
1600