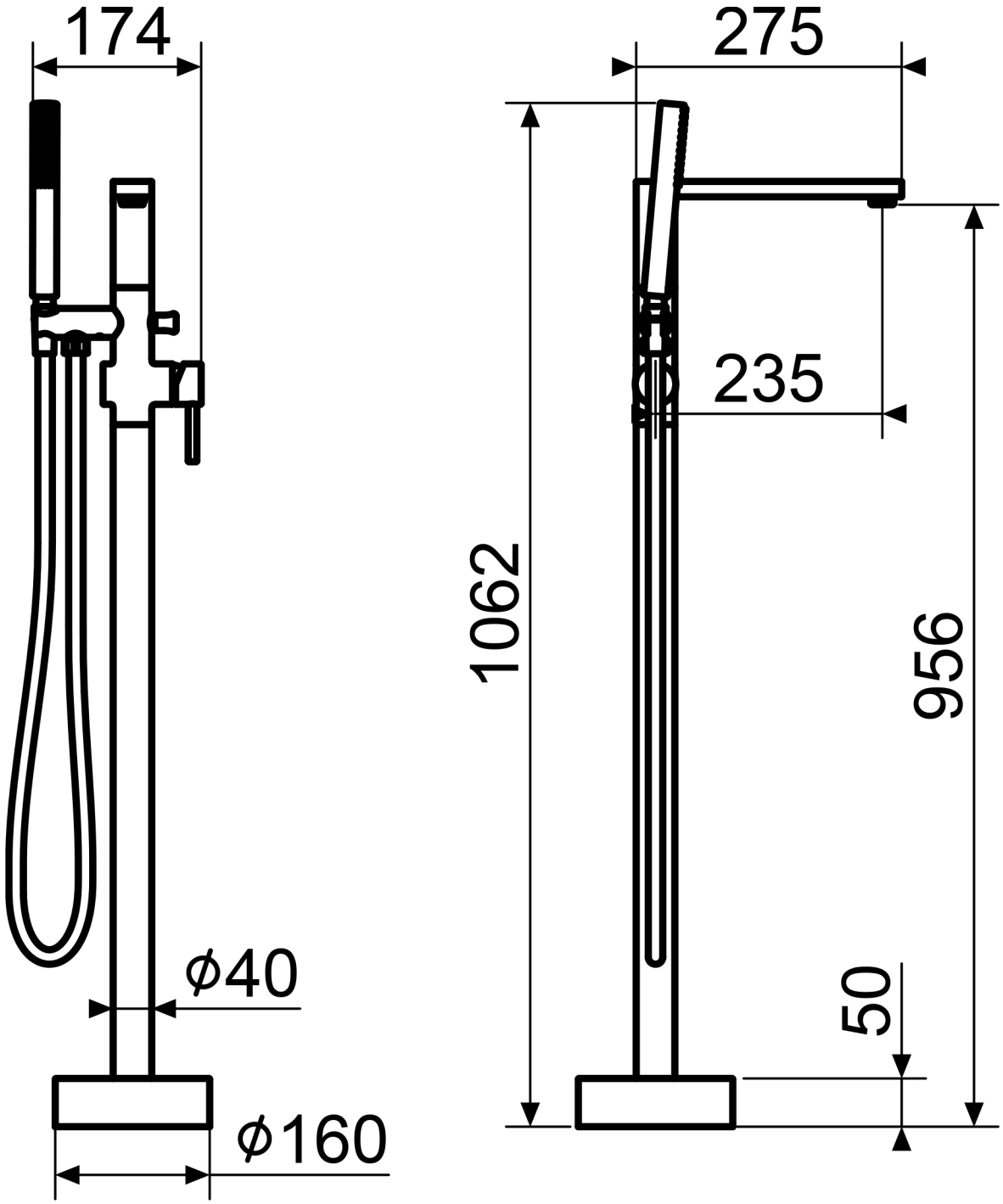
174
275
235
1062
956
50
ϕ40
ϕ160

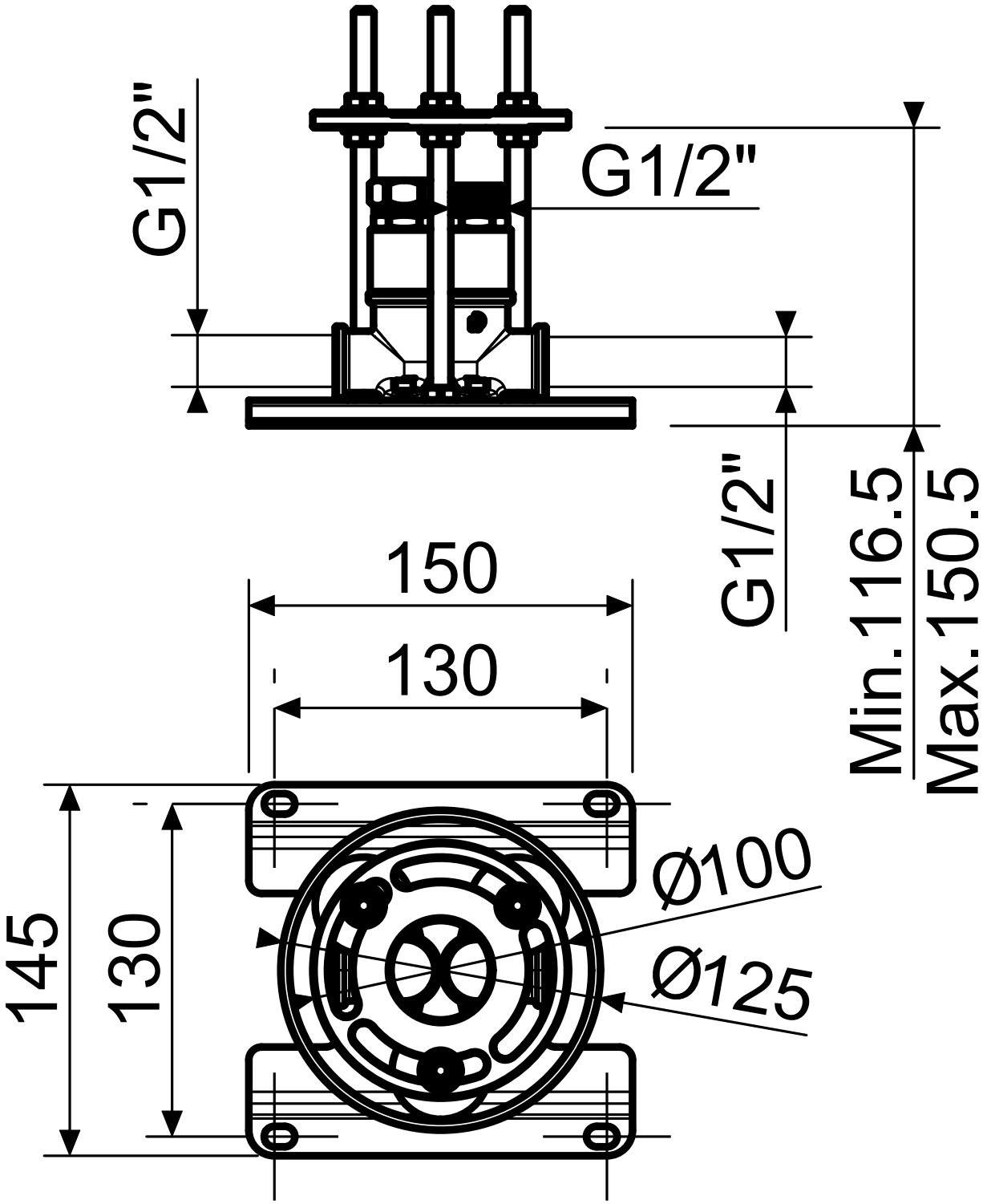
G1/2"
G1/2"
G1/2"
Min.116.5
Max.150.5
150
130
145
130
Ø100
Ø125